ZONE 1,21&2,22

EMERGENCY LIGHT FIXTURE

EXF250LED-A3

V.2026-1

© Copyright ATM Lighting sp. z o.o. All rights reserved.
The company ATM Lighting sp.z o.o. reserves the right to make changes without prior notice.

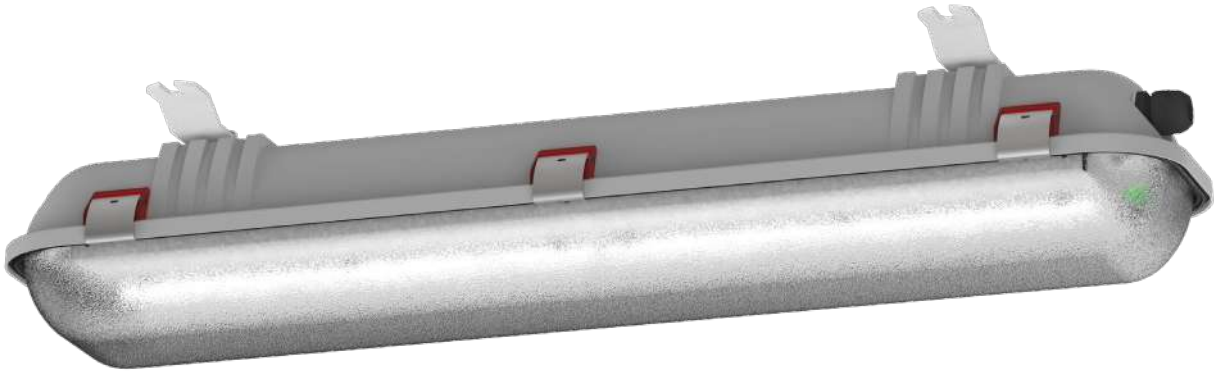

CNBOP 5392/2024
KDB 15ATEX0049X
IECEx KDB 20.0003X

CNBOP | IECEx | ATEX | ZONE 1,21 & 2,22 | 0°C *-20°C | +45°C | PC IK08 | IP66 | IP67 | EMERGENCY 3h | CONTROL SYSTEM DALI

** - check the operating conditions of the luminaire at sub-zero temperatures on page 5.*

EX MARKING: II 2G Ex eb mb IIC T5 Gb
II 2D Ex tb IIIC T55°C Db or T70°C Db

EXEMPLARY APPLICATIONS

REFINERIES

OFFSHORE

CHEMICAL PLANTS

CHEMICAL WAREHOUSES

PASSAGEWAYS IN EX ZONES

Explosionproof **ATEX certified** light fitting with **LED modules**. Designed to work in the zone **1.21 & 2.22** of the explosion hazard of gases, vapors and mists of flammable liquids with air, as well as of flammable dusts and fibers. The housing is made of **GRP**.

As standard equipped with autonomous **A3** power source.
Optionally can be equipped with DALI-2 driver **DA**.

The luminaire is not intended for exposure to external weather conditions.

© Copyright ATM Lighting sp. z o.o. All rights reserved.
The company ATM Lighting sp.z o.o. reserves the right to make changes without prior notice.

FEATURES

MECHANICAL PARAMETERS

housing	glass fibre reinforced polyester (GRP)
diffuser	UV stabilised polycarbonate (PC), polymethyl methacrylate (PMMA)
ingress protection	IP66/IP67
protection class	I
impact resistance	**PC:** IK08
mounting	using brackets *check: mountings*

ELECTRICAL PARAMETERS

connection terminals	2,5 mm²
input voltage	**34E:** 220-240V 50-60Hz, **25E:** 110-254V 50-60Hz, 220-250V 0Hz
light source	intrisically safe LED modules
power factor	>0,95
cable inlets	Ø20 *(wire 6-13mm)* Ø25 - *option (wire 9-17mm)*
overvoltage protection	1 kV (L-N), 2 kV (L-PE)

WORK PARAMETERS

temperatura otoczenia	0°C (*-20°C) to +45°C ** - check the operating conditions of the luminaire at sub-zero temperatures on page 5.*
żywotność	>100.000h L_{80} B_{50}

PHOTOMETRICAL PARAMETERS

CRI	>85
colour temperature	4000K 6500K - *option*

As a standard, the housing is equipped with a 21 gland system (two glands on one side and one on the other side of the housing). This housing can be used both as a terminal and a cross-type (both sides or one side).
The glands are equipped with sealing plugs, which should be left in place if the glands are not used.
For luminaire type 0600 only the gland arrangement 20 is available.

© Copyright ATM Lighting sp. z o.o. All rights reserved.
The company ATM Lighting sp.z o.o. reserves the right to make changes without prior notice.

DIMENSIONS

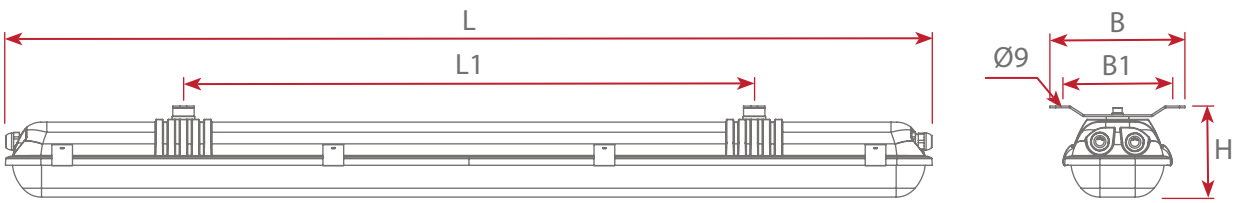

TYPE	L [mm]	L1 [mm]	B [mm]	B1 [mm]	H [mm]	WEIGHT
EXF250LED-0600	700	450	190	160	129	6kg
EXF250LED-1200	1300	800	190	160	129	10kg

STANDARD TYPES COMPARISON

Voltage 220-240V 50-60Hz (34E) A3

II 2G Ex eb mb IIC T5 Gb
II 2D Ex tb IIIC T55°C Db

TYPE	LUMINOUS FLUX [lm]	POWER CONS. [W]	EFFICIENCY [lm/W]	MAX. AMB. TEMP. [°C]
EXF250LED-0600-FX1	2715	21,2	128	45
EXF250LED-0600-FX2	5439	38,6	141	45
EXF250LED-1200-FX2	5511	38,6	143	45
EXF250LED-1200-FX4*	10701	74,4	144	45

** - in emergency mode, half of LED modules are activated.*

II 2G Ex eb mb IIC T5 Gb
II 2D Ex tb IIIC T70°C Db

TYPE	LUMINOUS FLUX [lm]	POWER CONS. [W]	EFFICIENCY [lm/W]	MAX. AMB. TEMP. [°C]
EXF250LED-0600-GX2	3484	25,3	138	45
EXF250LED-1200-GX2	3535	25,3	140	45
EXF250LED-1200-GX4	6922	47,0	147	45

OPTIONAL TYPES COMPARISON

Voltage 110-254V 50-60Hz; 220-250V 0Hz (25E) A3

II 2G Ex eb mb IIC T5 Gb
II 2D Ex tb IIIC T55°C Db

TYPE	LUMINOUS FLUX [lm]	POWER CONS. [W]	EFFICIENCY [lm/W]	MAX. AMB. TEMP. [°C]
EXF250LED-0600-FX1	2715	21,2	128	45
EXF250LED-0600-FX2	5439	38,0	143	45
EXF250LED-1200-FX2	5511	38,5	143	45
EXF250LED-1200-FX4	10701	75,6	142	45

II 2G Ex eb mb IIC T5 Gb
II 2D Ex tb IIIC T70°C Db

TYPE	LUMINOUS FLUX [lm]	POWER CONS. [W]	EFFICIENCY [lm/W]	MAX. AMB. TEMP. [°C]
EXF250LED-0600-GX2	3484	25,3	138	45
EXF250LED-1200-GX2	3535	25,3	140	45
EXF250LED-1200-GX4	6922	47,0	147	45

Luminous flux tolerance +/- 10%
Power tolerance +/- 10%
The parameters given in the following data sheet has been determined for the temperature Ta=25°C.

Luminous flux, light intensity distribution and efficiency has been tested on the basis of the standards EN ISO 17025:2005, norm series EN13032 and LM-79.

The actual data and General Warranty Conditions are available on our website **www.atmlighting.pl**

© Copyright ATM Lighting sp. z o.o. All rights reserved.
The company ATM Lighting sp.z o.o. reserves the right to make changes without prior notice.

EMERGENCY VERSION

3h

Emergency power module:

Version with 3h emergency power module **A3**

During the battery charging, the power consumption increases by 3W.

34E

MEAN EMERGENCY LUMINOUS FLUX

TYPE	LUMINOUS FLUX [lm]
EXF250LED-0600-FX1	575
EXF250LED-0600-FX2	679
EXF250LED-0600-GX2	759
EXF250LED-1200-FX2	697
EXF250LED-1200-FX4	697
EXF250LED-1200-GX2	774
EXF250LED-1200-GX4	646

25E

MEAN EMERGENCY LUMINOUS FLUX

TYPE	LUMINOUS FLUX [lm]
EXF250LED-0600-FX1	340
EXF250LED-0600-FX2	381
EXF250LED-0600-GX2	405
EXF250LED-1200-FX2	375
EXF250LED-1200-FX4	375
EXF250LED-1200-GX2	408
EXF250LED-1200-GX4	225

Note: For the **34E** power supply and the 0600 luminaire version and the version with an emergency power supply module, the possible arrangement of glands is 20.

The luminaire can operate within a temperature range of -20°C to 0°C, provided that the following conditions are met:

- Battery charging must always take place at temperatures above 0°C,
- Within the ambient temperature range of -20°C to 0°C, the luminaire must remain continuously on to prevent loss of battery capacity,
- When the battery is fully charged, the luminaire may switch to emergency mode at ambient temperatures from -20°C to 0°C.

The operating duration of the emergency modules is specified for Ta = 25°C.

For ambient temperatures between 40°C and 45°C, the operating time of the emergency module is reduced to 2 hours and 30 minutes.

OPTIONAL VERSIONS

3F

3-phase:

Version with terminals L1, L2, L3, PE, N powered from L and N with voltage of 230V **3F**

DALI-2 driver:

Version equipped with DALI-2 driver **DA**

Optionally, the housing can be equipped with an integrated power supply with a DALI-2 interface, which allows monitoring the operation of the fixture and controlling the lighting using data directly from motion sensors or from the building management system (BMS). A properly configured lighting control system can significantly reduce electricity costs and improve user ergonomics.
The DALI-2 power supply is available only for the 35E power version (220-240V, 50-60Hz). Power at the terminal > 12V.

MAXIMUM NUMBER OF FIXTURES CONNECTED IN LINE

MAXIMUM NUMBER OF LINE CONNECTED LUMINAIRES DEPENDING ON THE USED CIRCUIT BREAKERS

Power supply	B16	C16	Max. starting current	Starting time
25E	24	40	24A	< 250 µs
34E	27	45	14A	< 1300 µs

ADDITIONAL PICTOGRAM

The light fitting can be equipped with additional self-adhesive pictogram.

Pictogram brightness **>200 cd/m2**
Pictogram can be added only for luminaire type FX2.

The version of luminaire with pictogram that is powered from central battery is available on separate data sheet **EXF250LED.**

© Copyright ATM Lighting sp. z o.o. All rights reserved.
The company ATM Lighting sp.z o.o. reserves the right to make changes without prior notice.

MOUNTINGS

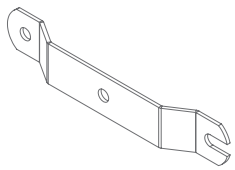

standard
AMO1

standard mounting bracket made of 1.5mm thick steel, mounting hole spacing 160mm

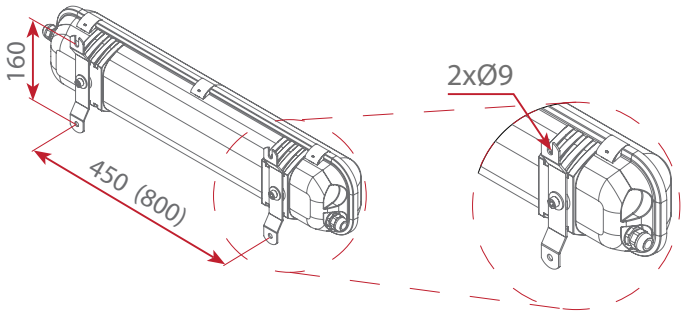

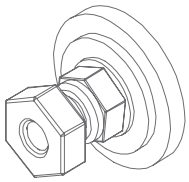

BK

standard bolt kit made to install the light fitting on the thin surfaces or the cable trays

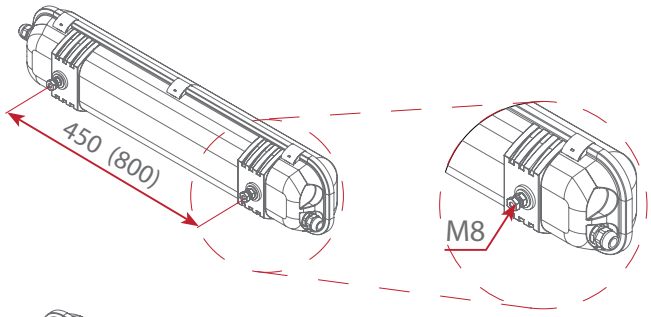

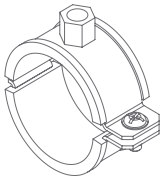

AMO3

stainless steel pipe clamp:
AMO3A: 26-30mm,
AMO3B: 31-36mm,
AMO3C: 41-46mm,
AMO3D: 47-52mm,
AMO3E: 59-64mm

Please specify while ordering.

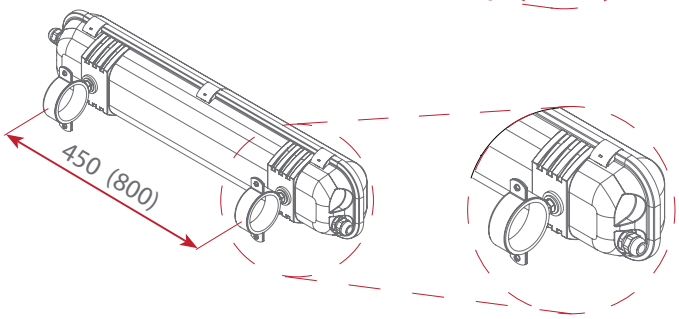

AMO4

bracket for installation at 45°

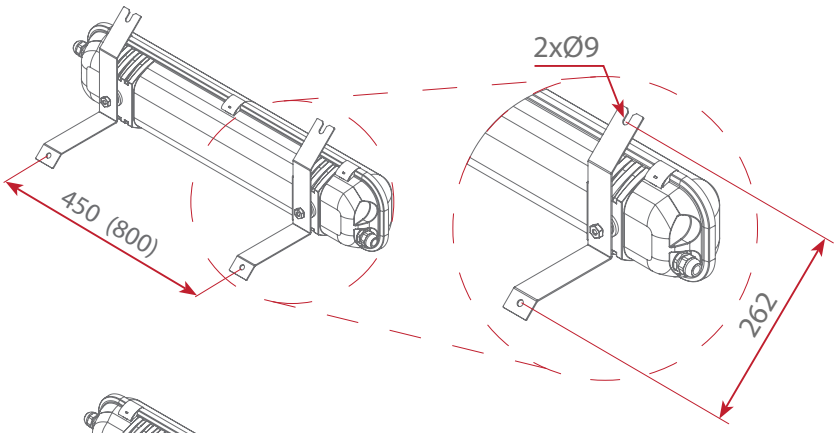

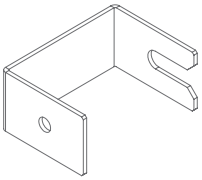

AMO5

68mm distance bracket

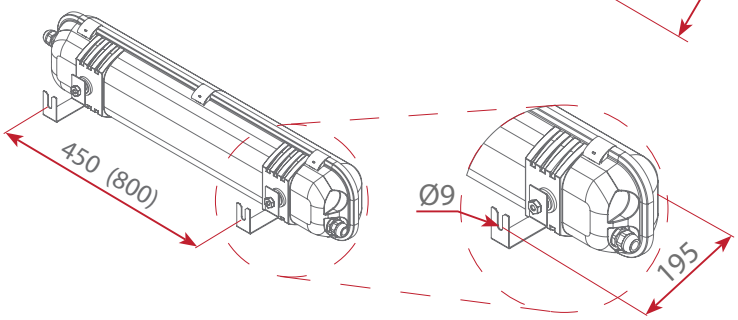

© Copyright ATM Lighting sp. z o.o. All rights reserved.
The company ATM Lighting sp.z o.o. reserves the right to make changes without prior notice.

PHOTOMETRY

STANDARD

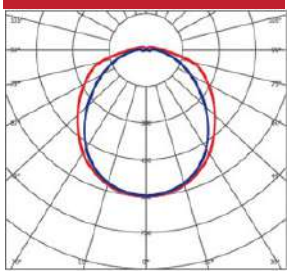

CONFIGURATIONS

E X F 2 5 0 L E D - _ _ _ _ - _ _ - 34E - 44 - 21 P 20 - GRP - PC - A3 - _ - AMO1 + _

group
explosionproof light fittings

type
type 250

source of light
LED modules

approximate length
~ 600mm, 1200mm

LED module type

LED module quantity

power supply
34E - 220-240V 50-60Hz;
25E - 110-254V 50-60Hz; 220-250V 0Hz

wiring
40 - single 4-pole terminal → 4
44 - double 4-pole terminal → 4 4 ←
60 - single 6-pole terminal → 6 version DA
66 - double 6-pole terminal → 6 6 ← version DA

cable inlets - quantity
21 - two cable inlets at one side and one at the another → 2 1 ←
20 - two cable inlets at one side → 2 0
22 - two cable inlets at both sides → 2 2 ←

cable inlets - material
P - plastic
M - metal

cable inlets - size
20 - Ø20
25 - Ø25

housing material
GRP - glass fiber reinforced polyester

diffuser material
PC - UV stabilised polycarbonate
PM - polymethyl methacrylate (PMMA)

emergency version
A3 - version with 3h emergency power module . **Avaliable only with 20 cable inlets system for light fitting size 0600.**

optional version
DA - version equipped with integrated DALI-2 power supply. Version available only for 34E power supply (220-240V, 50-60Hz).

standard mounting
AMO1 - standard bracket

optional mounting
Additional bracket for self-replacement - check mountings on page 6.

				0	6	0	0	FX	1		25E	40	20	M	25			PM			DA			BK
				1	2	0	0	GX	2			60	22											AMO3
									4			66												AMO4
																								AMO5

NOTE

The luminaire is not intended for exposure to external weather conditions.

DOWNLOADS

LDT CE ATEX IECEx CNBOP

© Copyright ATM Lighting sp. z o.o. All rights reserved.
The company ATM Lighting sp.z o.o. reserves the right to make changes without prior notice.

www.atmlighting.pl
office@atmlighting.pl